www.collegehillshonda.com

HONDA INSTALLATION INSTRUCTIONS	Accessory	Application	Publications No.
	SECOND ROW SEAT COVERS (with center second row seat) P/N 08P32-THR-100D	2022 ODYSSEY	VERSION 1
			Issue Date JAN 2021

PARTS LIST

Second row seat covers

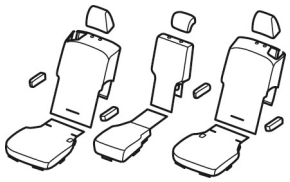

Illustration of the Second Row Seat Covers in the Vehicle

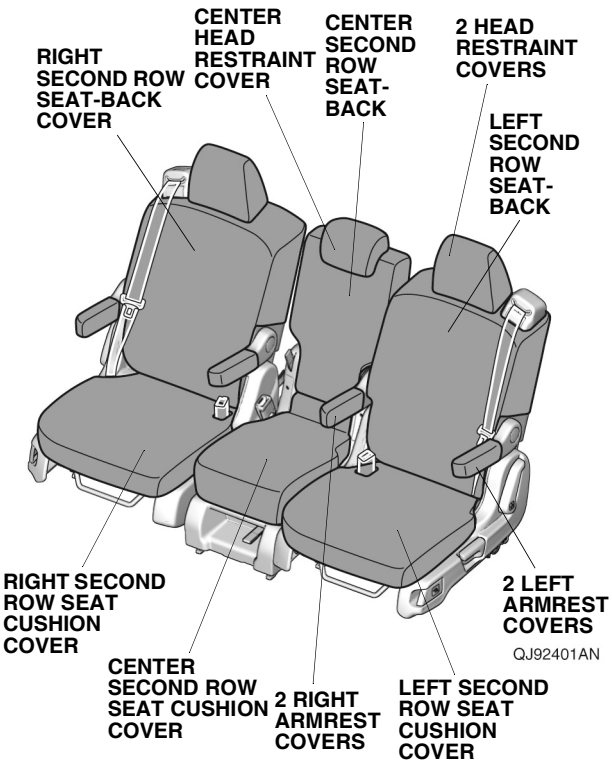

INSTALLATION

NOTE:

- Do not damage the vehicle during installation.
- Do not install the seat covers on the front seats. Covering the front seat may prevent the side airbag from inflating during a side impact.
- Identify each seat cover by the tags on the back.

Installing the Second Row Seat Covers

1. While pressing the head restraint guide button, remove the head restraint from the right second row seat by pulling it upward.

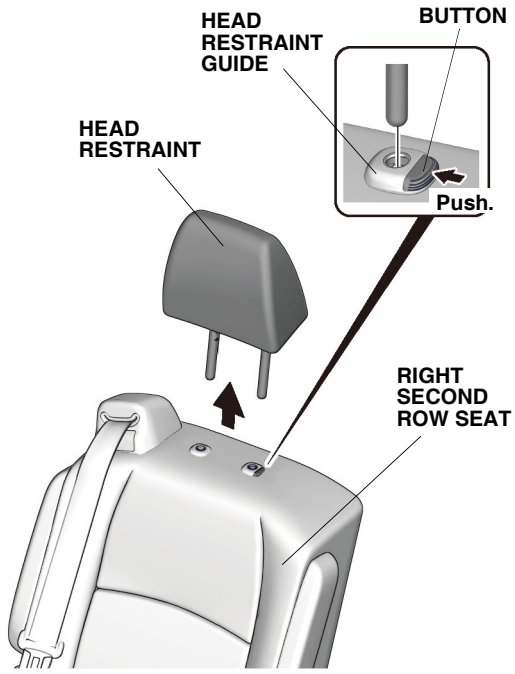

2. Fit the head restraint cover onto the head restraint.

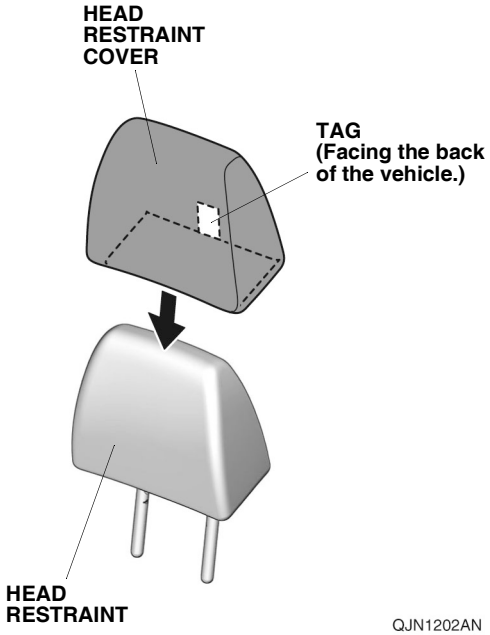

© 2021 American Honda Motor Co., Inc. – All Rights Reserved.

www.collegehillshonda.com

3. Fold the right second row seat-back half way down. Fit the right second row seat cushion cover onto the right second row seat cushion.

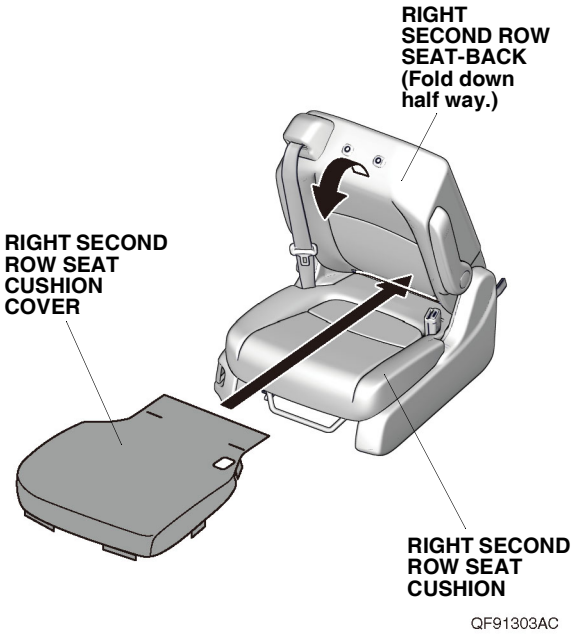

4. Secure the right second row seat cushion cover to the right second row seat cushion with four tabs and two fasteners.

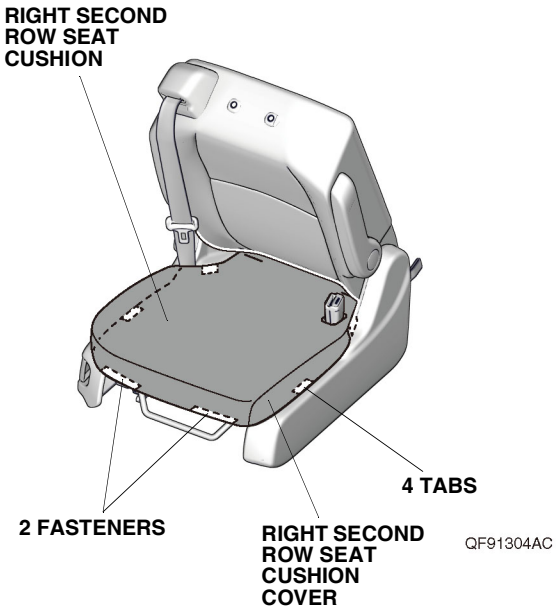

5. Secure the right second row seat cushion cover to the right second row seat cushion with one fastener.

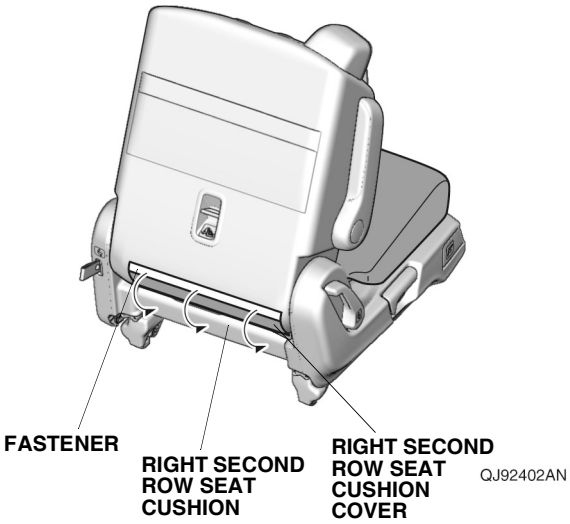

6. Pull down the left and right armrests. Fit the right second row seat-back cover onto the right second row seat-back through the seat belt. Insert the right second row seat-back cover under each head restraint guide.

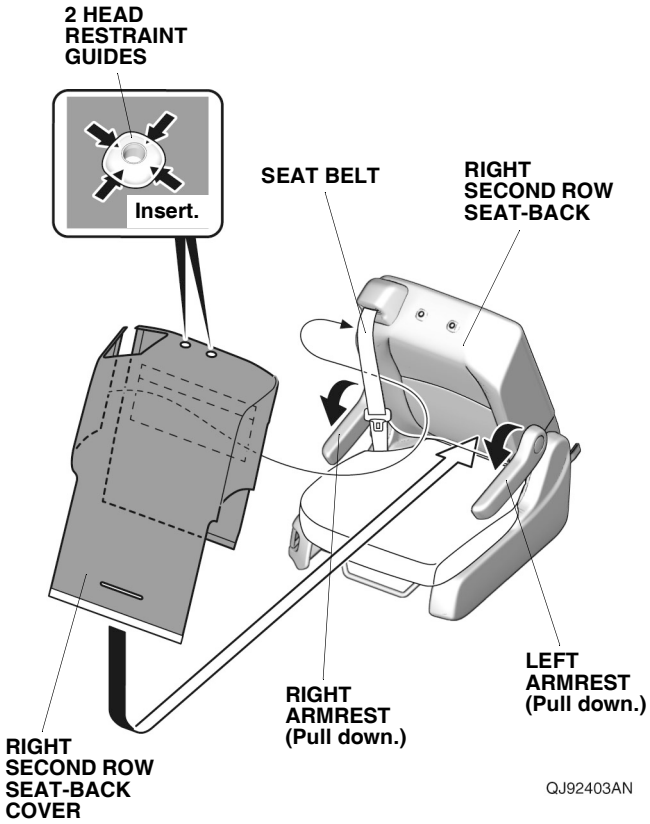

© 2021 American Honda Motor Co., Inc. – All Rights Reserved.

www.collegehillshonda.com

If the vehicle is equipped with second row seat-back pocket, continue with step 7; otherwise, go to step 8.

With second row seat-back pocket

7. Insert the right second row seat-back cover pocket into the right second row seat-back pocket.

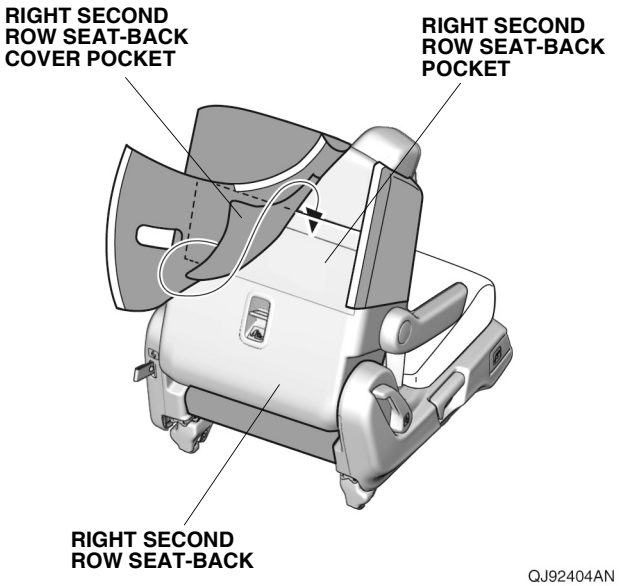

8. Secure the right second row seat-back cover with two fasteners.

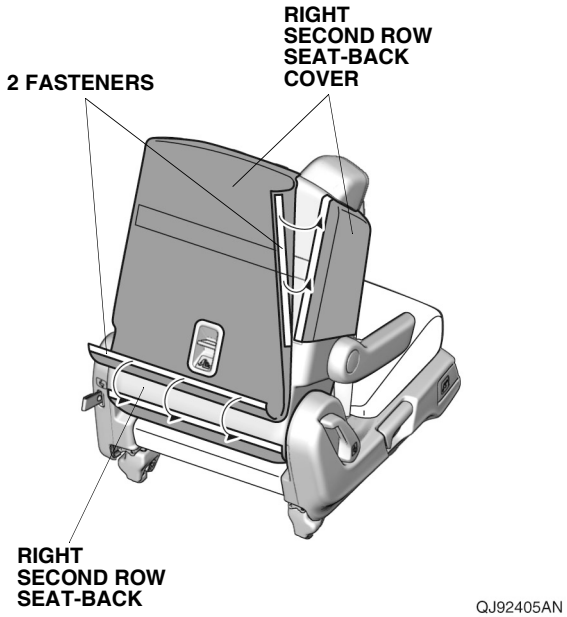

9. Raise the right second row seat-back.

10. Fit the left and right armrest covers onto the left and right armrests.
    NOTE: Check the tag on the armrest cover to ensure correct orientation.

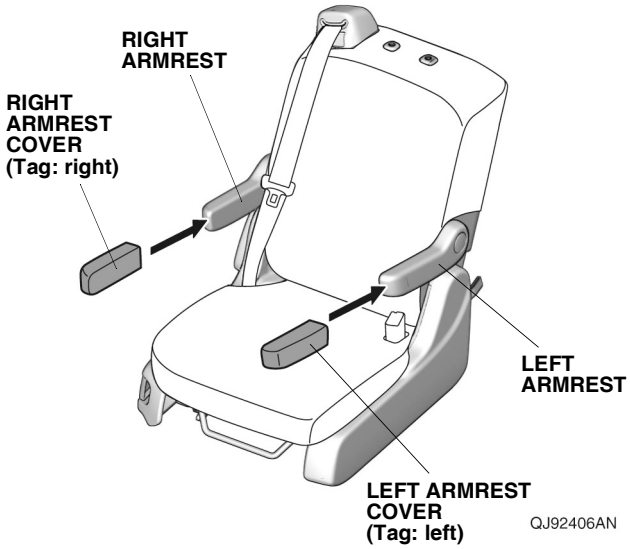

11. Repeat steps 1 through 10 on the left side of the vehicle.
12. Install the head restraints on the left and right second row seats.
13. While pressing the head restraint guide button, remove the center head restraint from the center second row seat by pulling it upward.

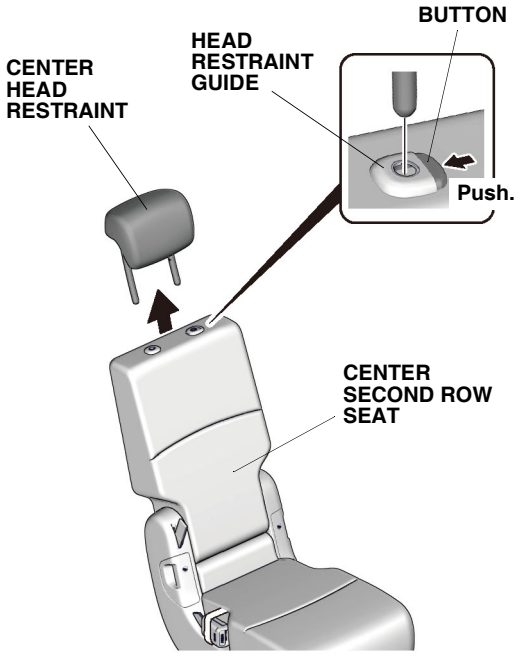

© 2021 American Honda Motor Co., Inc. – All Rights Reserved.

www.collegehillshonda.com

14. Fit the center head restraint cover onto the center head restraint.

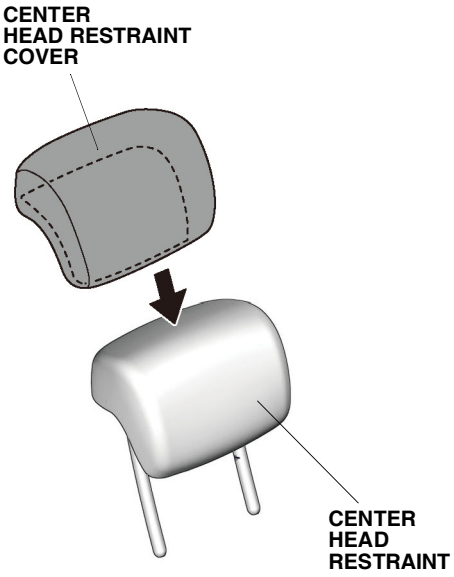

15. Release the seat belt buckle from the loop.

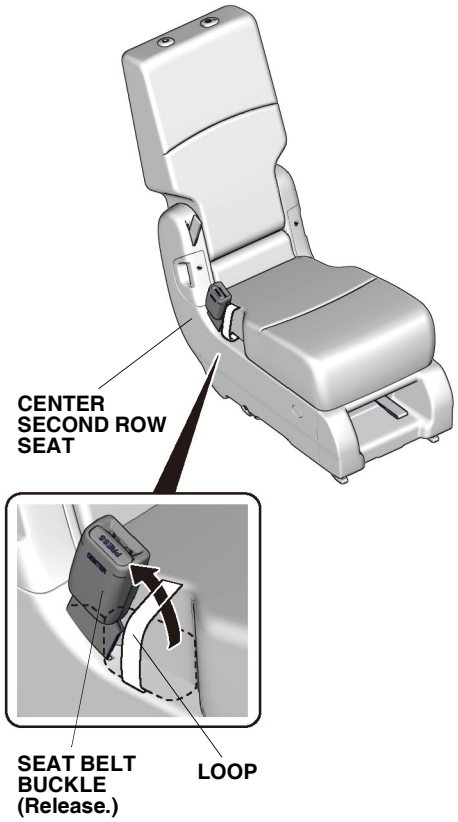

16. Fit the center second row seat cushion cover onto the center second row seat cushion.

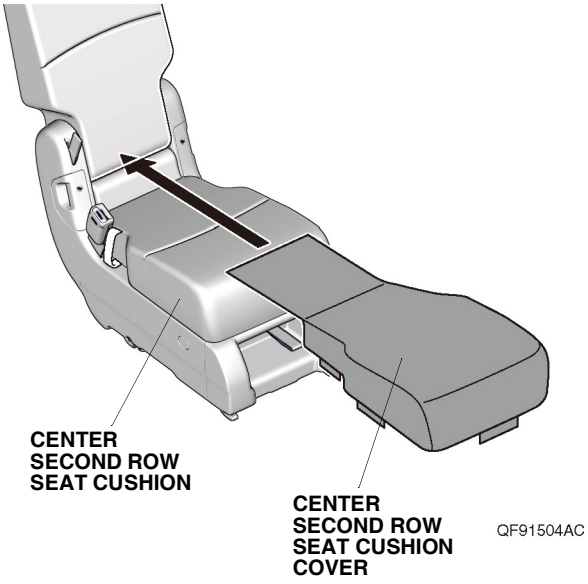

17. Secure the center second row seat cushion cover to the center second row seat cushion with five tabs.

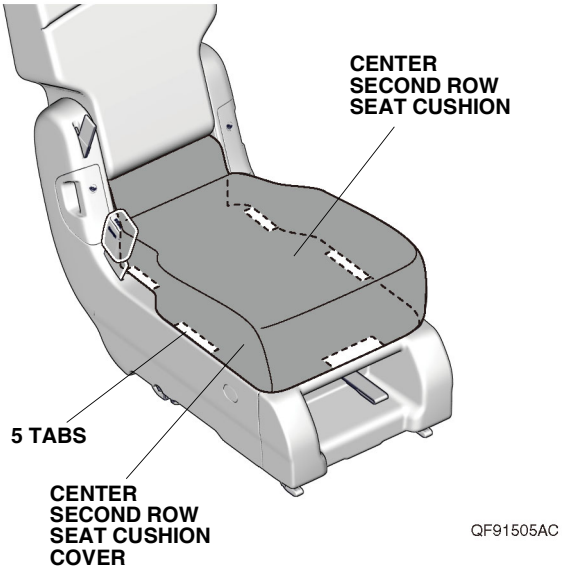

© 2021 American Honda Motor Co., Inc. – All Rights Reserved.

www.collegehillshonda.com

18. Secure the center second row seat cushion cover to the center second row seat cushion with one fastener.
NOTE: Do not cover the anchor.

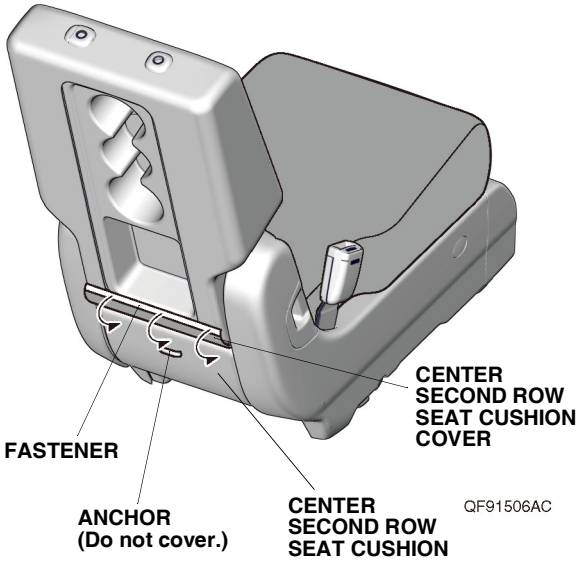

19. Fit the center second row seat-back cover to the center second row seat-back. Insert the center second row seat-back cover under each head restraint guide.

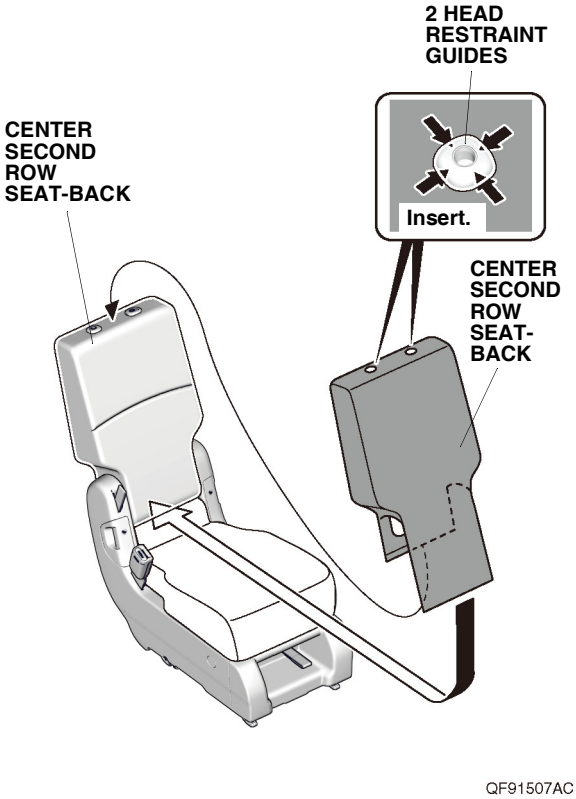

20. Pull down the center second row seat-back. Secure the center second row seat-back cover with one fastener.

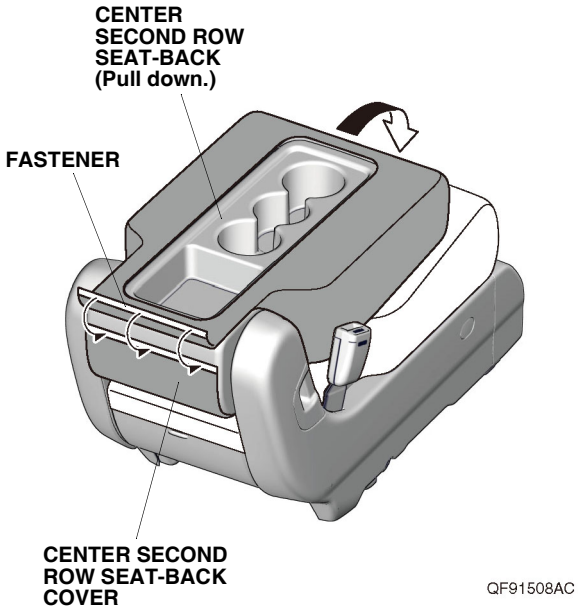

21. Raise the center second row seat-back.
22. Install the center head restraint.

© 2021 American Honda Motor Co., Inc. – All Rights Reserved.