www.collegehillshonda.com

HONDA

INSTALLATION INSTRUCTIONS

Accessory	Application	Publications No.
FULL NOSE MASK P/N 08P35-TK8-100A	2016 ODYSSEY	VERSION 1
		Issue Date JULY 2015

PARTS LIST

Mask
(hood section)

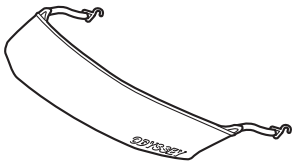

Mask
(bumper section)

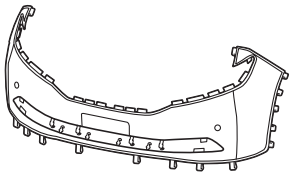

Elastic cord

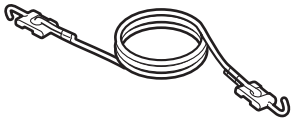

Storage bag

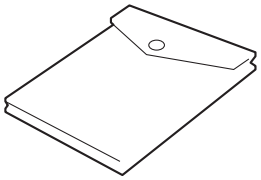

TOOLS AND SUPPLIES REQUIRED

Scissors

INSTALLATION

Customer Information: The information in this installation instruction is intended for use only by skilled technicians who have the proper tools, equipment, and training to correctly and safely add equipment to your vehicle. These procedures should not be attempted by "do-it-yourselfers."

NOTE:

- Make sure the vehicle and the nose mask are clean and completely dry before installation. If moisture under the mask is allowed to dry, it may cloud the paint. If the mask gets wet, remove it and allow it to air-dry completely.
- Make sure any repainted surfaces are cured.
- Make sure the hood and nose of the vehicle have been waxed with a high-quality paste wax.
- Make sure to install the nose mask securely. If the nose mask starts to flap or comes loose while driving, safely pull to the side of the road, stop the vehicle, and re-secure or remove the mask.

Displaying the License Plate

If your state law requires the display of both license plates, cut out the piece of the bumper section that covers the front license plate:

- Face the inside of the mask toward you.
- Carefully cut out the overcast stitching with scissors. Remove the stitching and the license plate section.

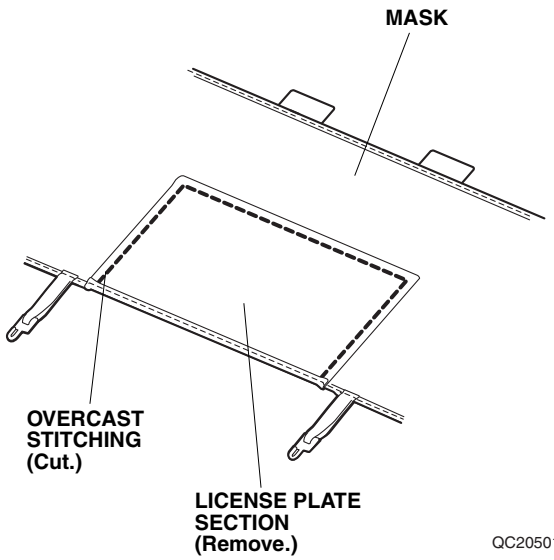

© 2015 American Honda Motor Co., Inc. – All Rights Reserved.

www.collegehillshonda.com

With Front Corner Sensors

If the vehicle is equipped with front corner sensors, cut out the piece of the bumper section that covers the front corner sensors:

- Face the outside of the mask toward you.
- Carefully cut out the mask with scissors. Remove the front corner sensor section.

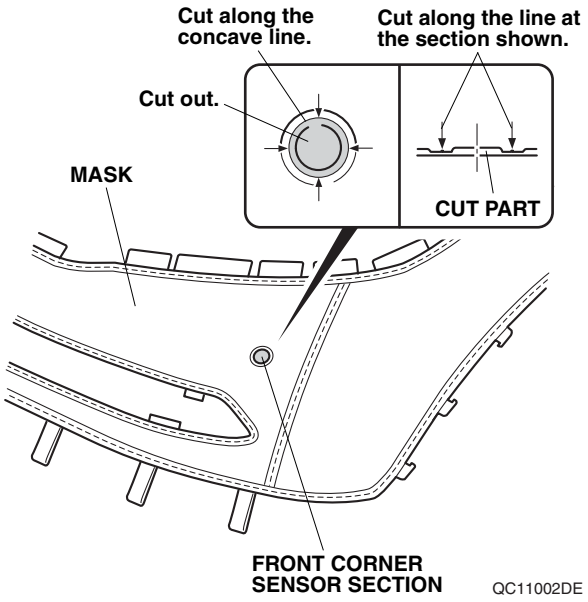

Installing the Hood Section

1. Open the hood. Fit the corners of the mask (hood section) around the hood. Adjust the mask so that it fits smoothly over the edges. Attach four hooks to the hood.
   Remove / install the hooks by inserting your finger into the belt of each hook. Pulling the hooks with excessive force can break the hook strap. Close the hood.

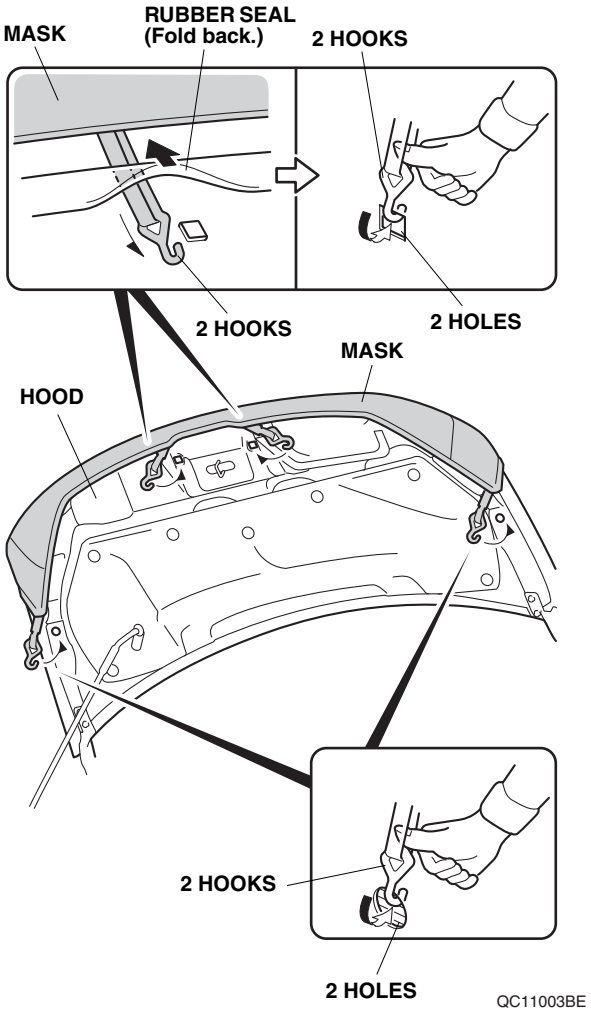

© 2015 American Honda Motor Co., Inc. – All Rights Reserved.

www.collegehillshonda.com

Installing the Bumper Section

2. Slip the pocket on the mask onto the front corner of the left front fender.

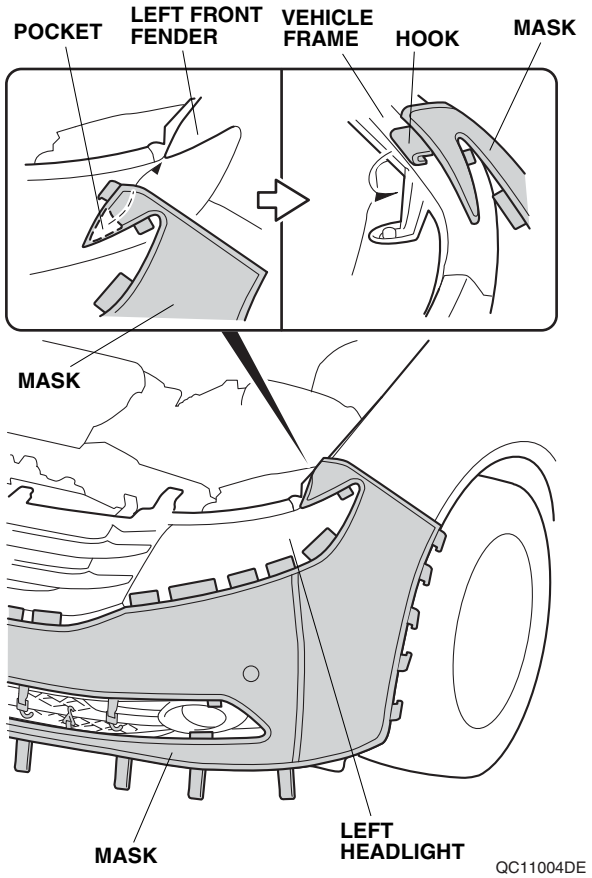

3. Secure one hook to the vehicle frame.

4. Pull the mask back toward the fenderwell, smooth out any wrinkles, and secure five hooks to the fenderwell.

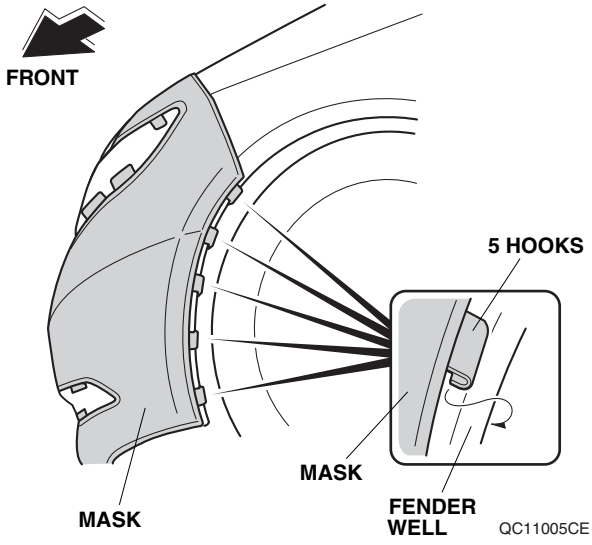

5. Insert six tabs under the left headlight.

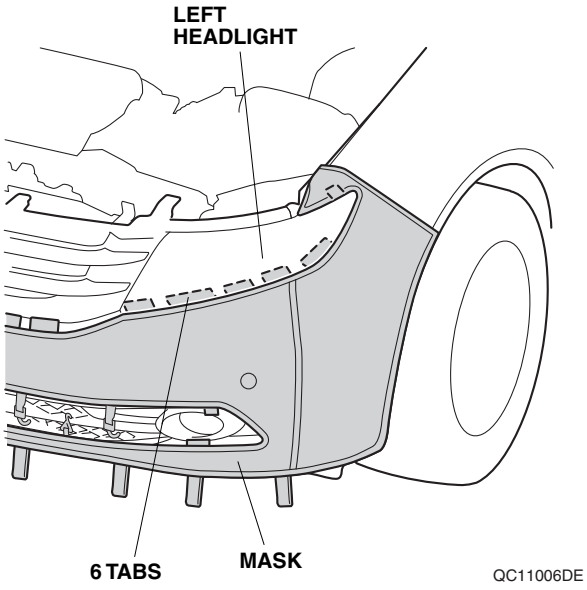

6. Insert two tabs between front bumper.

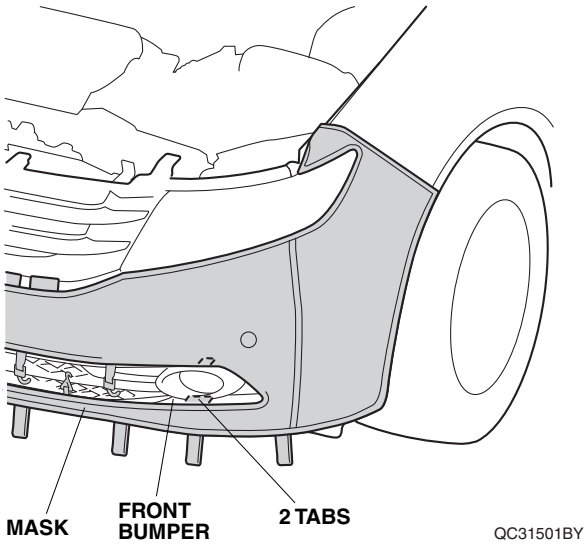

7. Repeat steps 2 through 6 on the right side of the vehicle.

© 2015 American Honda Motor Co., Inc. – All Rights Reserved.

www.collegehillshonda.com

8. Route the elastic cord through eight loops on the bottom of the mask.

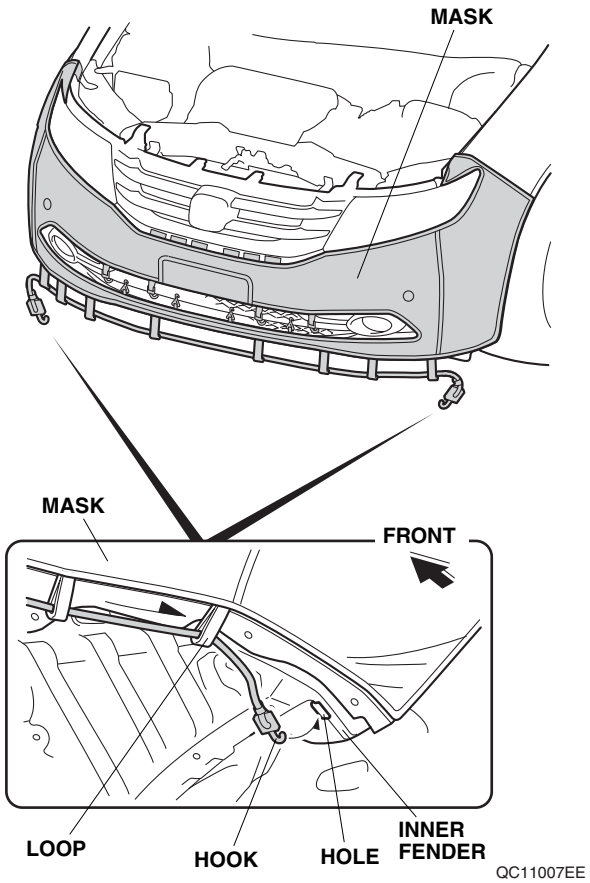

9. Secure one hook on the elastic cord to the hole of the inner fender.

10. Stretch out the elastic cord after routing it through each loop then secure the other hook to the inner fender on the other side.

11. Secure four hooks to the front bumper.

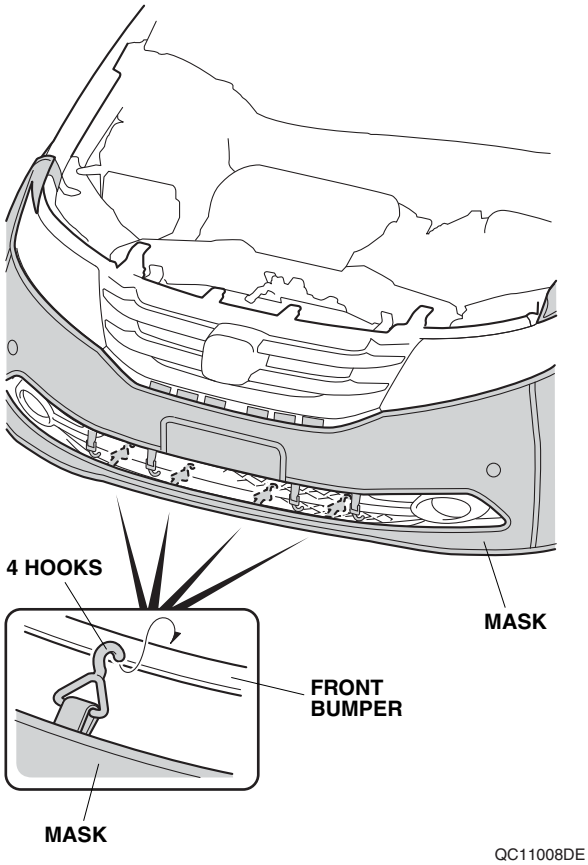

© 2015 American Honda Motor Co., Inc. – All Rights Reserved.

www.collegehillshonda.com

12. Secure four hooks to the front bumper.

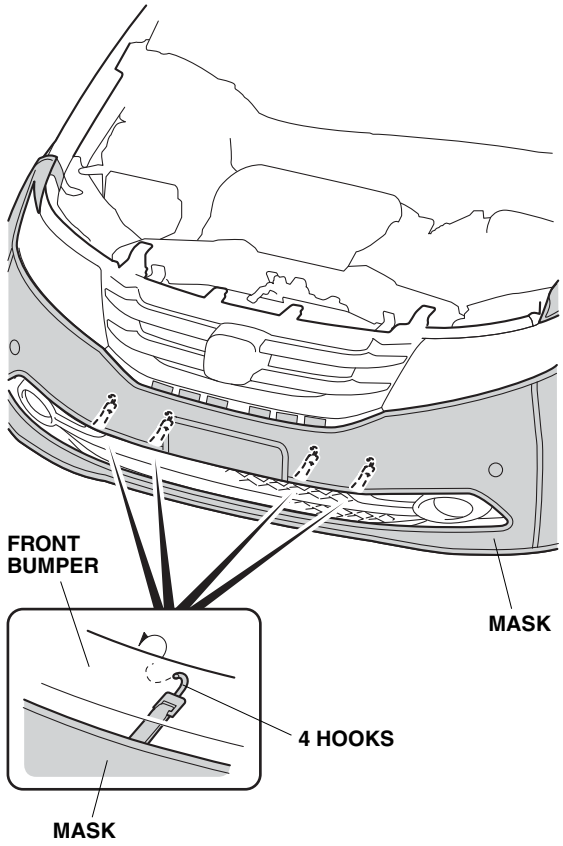

QC11009DE

13. Insert six tabs under the front grille.

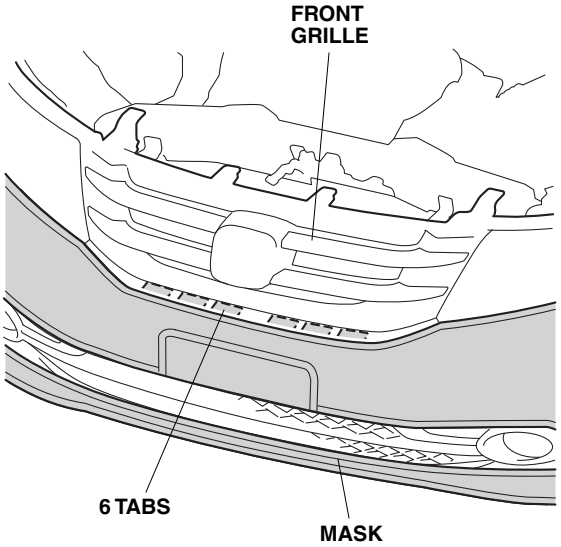

QC11010DE

CLEANING THE NOSE MASK

Use a sponge or cloth with a solution of mild liquid dishwashing soap and water to clean the vinyl and the flannel backing. Rinse the mask completely with a clean water, and hang it to dry out in direct sunlight. Make sure the mask is completely dry before you reinstall it.

© 2015 American Honda Motor Co., Inc. – All Rights Reserved.