www.collegehillshonda.com

HONDA

INSTALLATION INSTRUCTIONS

Accessory	Application	Publications No.
THIRD-ROW SUNSHADE P/N 08R12-SHJ-100	2008 ODYSSEY	All 38141
		Issue Date OCT 2007

PARTS LIST

Left rear sunshade

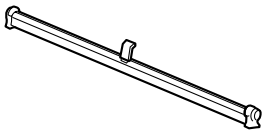

Right rear sunshade

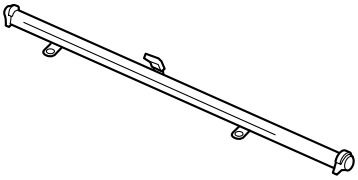

4 Brackets

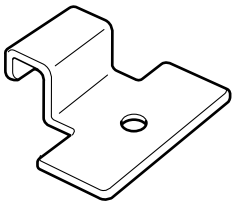

4 Rivets

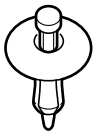

TOOLS AND SUPPLIES REQUIRED

Felt-tip pen
Center punch
Drill
7 mm Drill bit
Isopropyl alcohol
6-inch scale
Hammer
Tape

INSTALLATION

NOTE:

- This sunshade should be installed only if the ambient air temperature is 60°F (15°C) or above.
- Allow the adhesive to cure for 24 hours before attaching the sunshade to the bracket.

Driver's Side

1. Remove the spare tire cover from the left rear side liner (11 tabs).

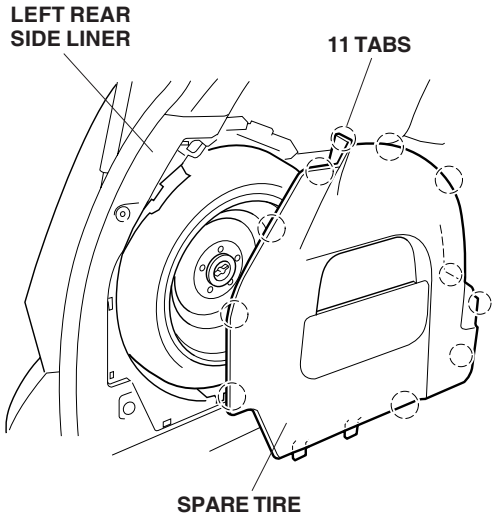

4122010Y

2. If equipped, remove the anchor bolt and the anchor bolt cover and take out the spare tire.

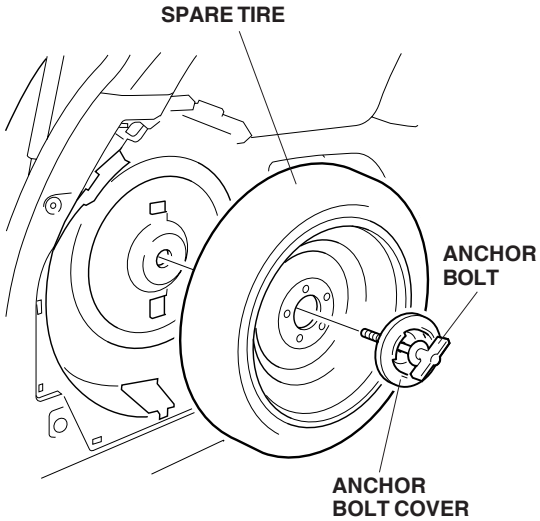

4122020Y

© 2007 American Honda Motor Co., Inc. - All Rights Reserved.

3. Pull away the weatherstrip from the left rear side trim panel. Remove the anchor bolt, disengage the three clips and the four retaining tabs, and pull out the rear portion of the left rear side trim panel.

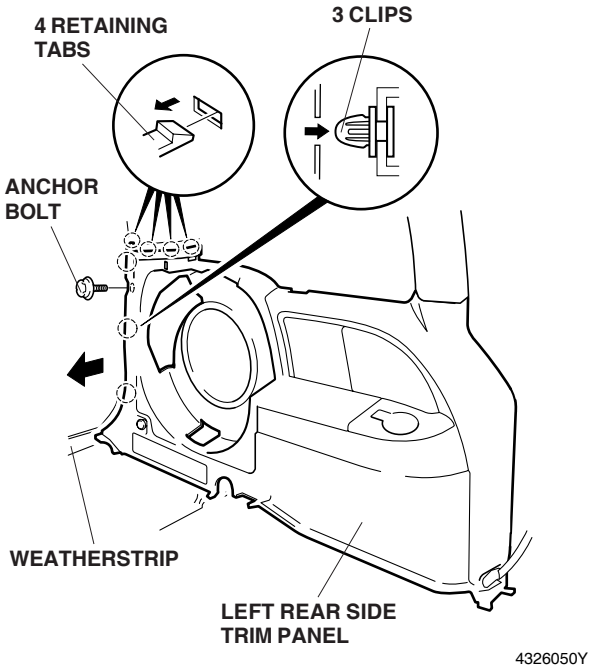

4. Remove the left speaker cover (two clips and three retaining tabs).

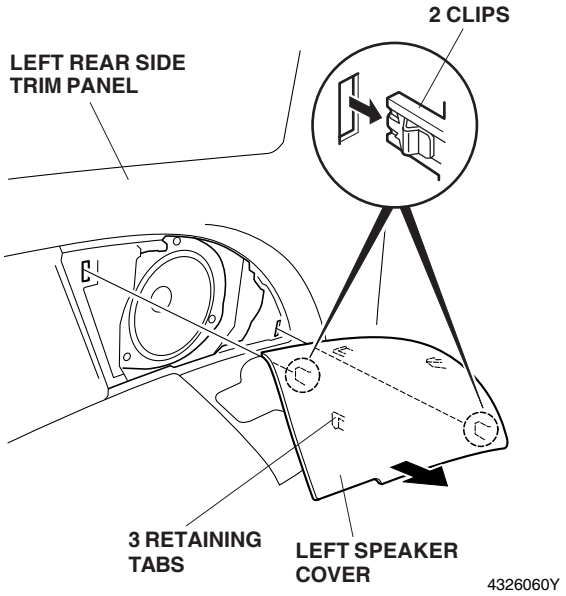

5. While gently pulling on the side trim panel, fit the two brackets from the left rear sunshade over the edge of the left rear side trim panel. Align the rear edge of the sunshade with the rear edge of the seat belt cover.

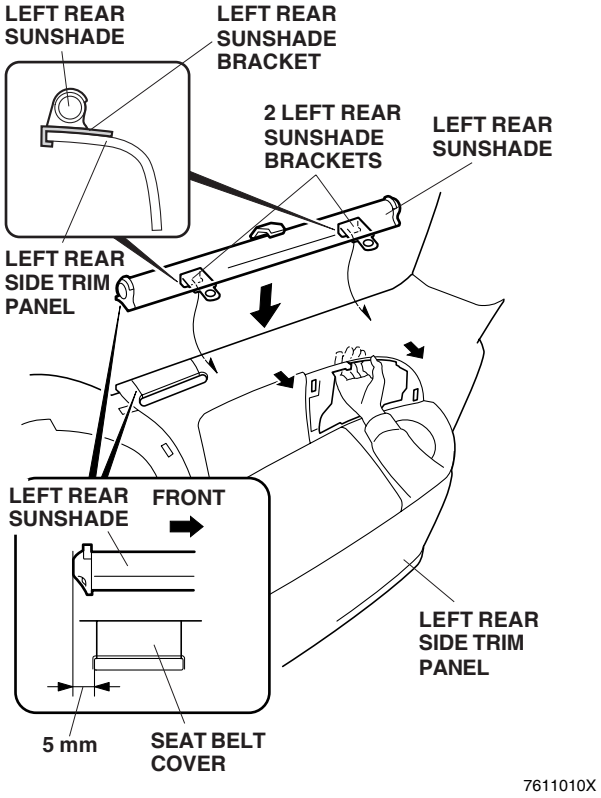

6. Using a felt-tip pen, mark the left rear side trim through the center of each bracket hole. Remove the rear sunshade.

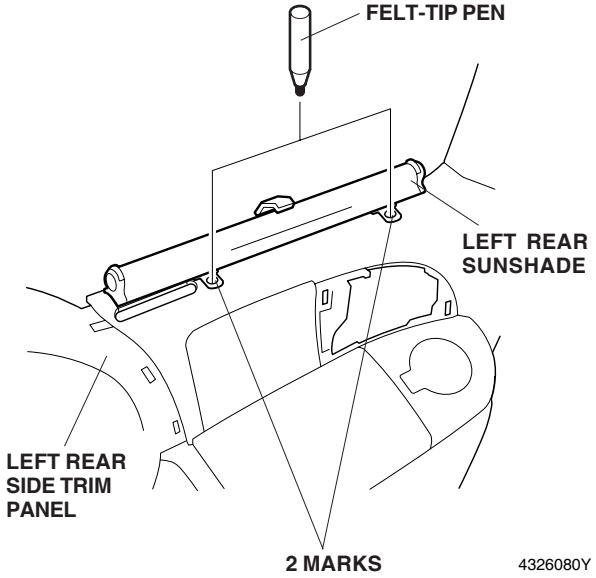

© 2007 American Honda Motor Co., Inc. - All Rights Reserved.

7. Center-punch the marks you made in the left rear side trim panel and drill each mark with a 7 mm drill bit:
   - Using adhesive tape, wrap the end of the drill bit 5 mm from the tip.
   - While wearing eye protection, drill a 7 mm hole through each center-punched mark.
   - Remove any burrs from the drilled holes.

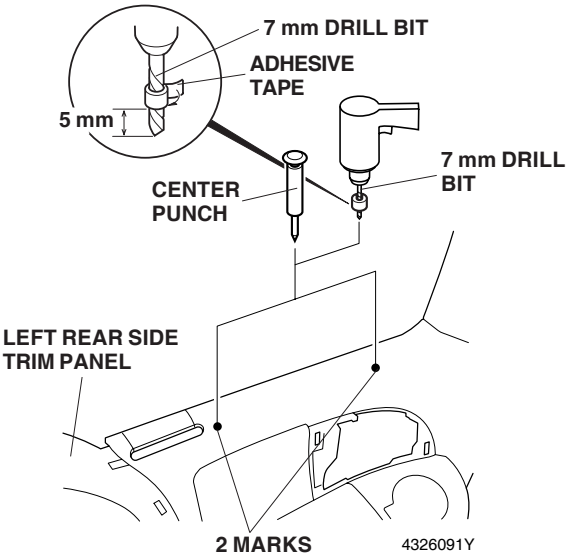

8. Reinstall the left rear sunshade on the left rear side trim panel, and align the brackets from the left rear sunshade with the holes you drilled.

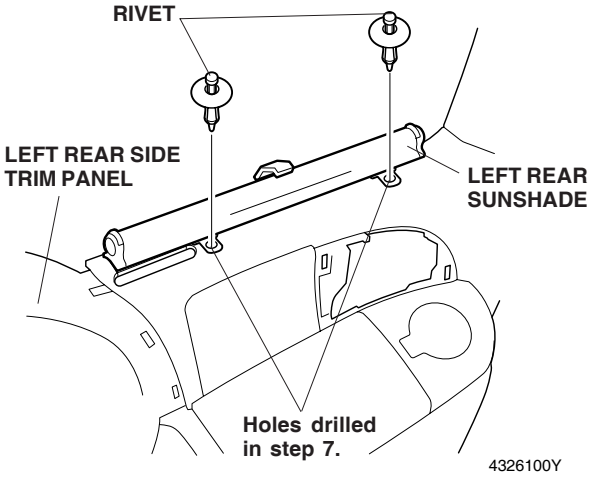

9. Secure the two brackets from the left rear sunshade to the left rear side trim panel with the two rivets. Reinstall the left rear side trim panel.

10. Insert a 6-inch scale against the top of the rear window between the glass and the headliner until the scale contacts the top of the glass. Measure 25 mm down from the top of the glass, and attach strips of masking tape to the window in the areas shown.

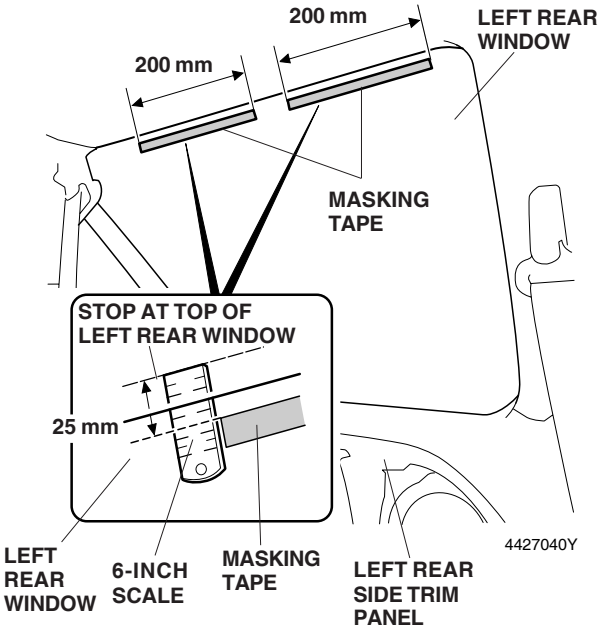

11. Pull up the left rear sunshade. Align the two cutouts in the left rear sunshade with the two strips of masking tape attached to the rear window. Using a felt-tip pen, mark the top of the masking tape at each side of cutout in the rear sunshade. Roll down the left rear sunshade.

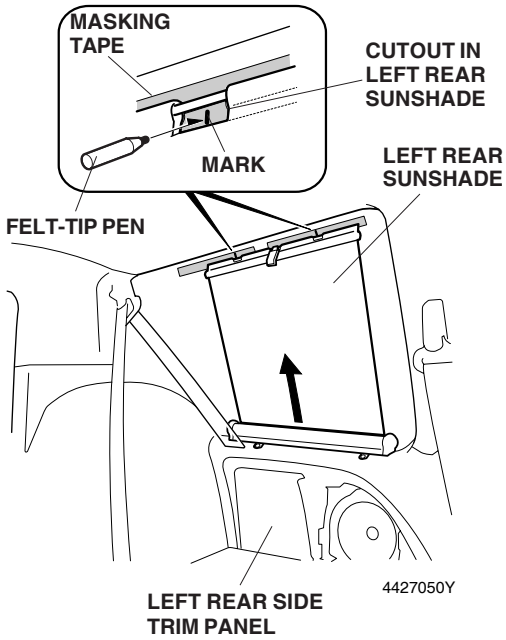

© 2007 American Honda Motor Co., Inc. - All Rights Reserved.

12. Using isopropyl alcohol on a shop towel, clean the left rear window above the marks you made on the masking tape.

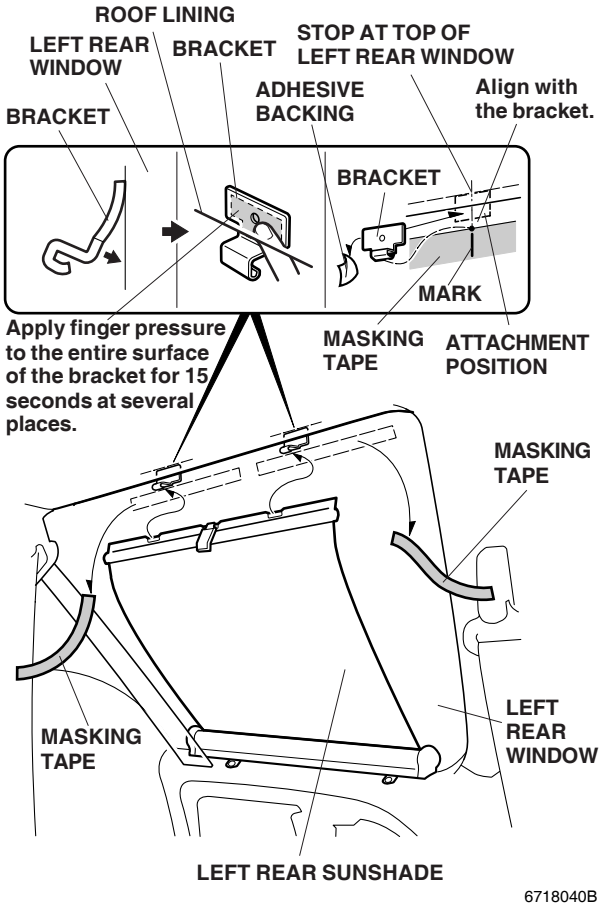

13. Remove the adhesive backing from one of the brackets, and attach the bracket to the top of the right rear window between the marks on the masking tape.
    - Slightly turn up the roof lining.
    - Place the tape surface on the upper side of the bracket against the glass surface.
    - Apply force to the bracket so that it becomes curved, and gradually push downward to attach it.
    - Remove the masking tape from the window.
    - Apply finger pressure to the bracket for 15 seconds to allow the tape to adhere to the glass. Install the other bracket the same way.

    NOTE: Be careful, as wrinkles will form when the roof lining is turned up.

14. If equipped, reinstall the spare tire and the spare tire cover.

Passenger's Side

15. Pull away the weatherstrip from the right rear side trim panel. Remove the anchor bolt. Disengage the two clips and the four retaining tabs, and pull up on the right rear side trim panel.

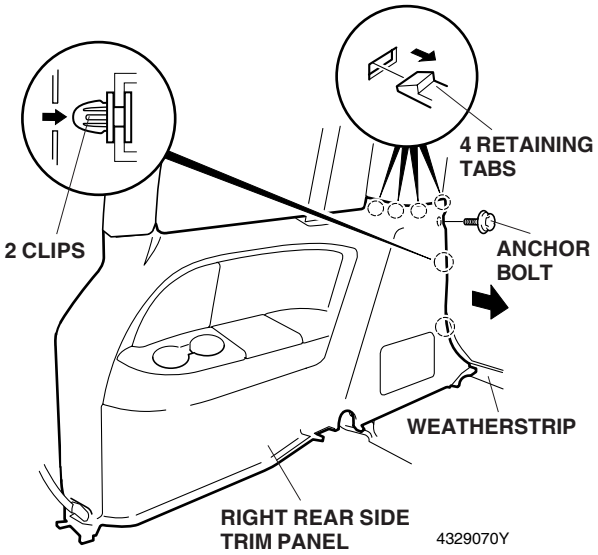

16. Remove the right rear speaker cover (two clips and three retaining tabs).

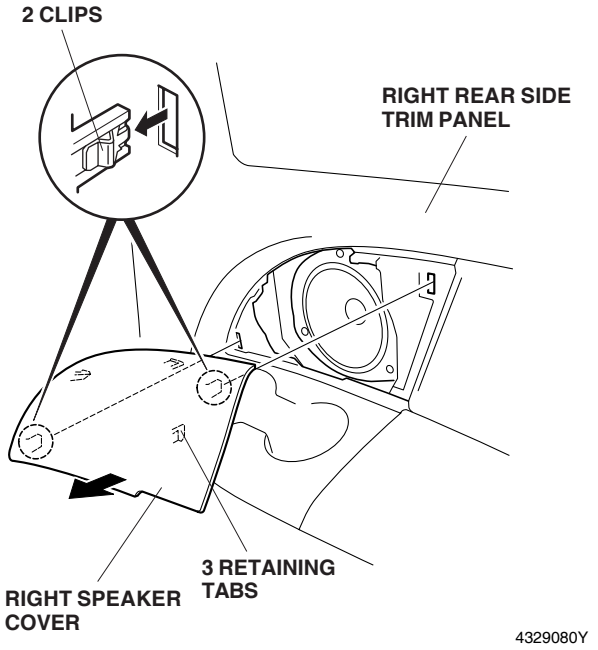

© 2007 American Honda Motor Co., Inc. - All Rights Reserved.

17. While gently pulling on the side trim panel, fit the two brackets from the right rear sunshade over the edge of the rear side trim panel. Align the rear edge of the sunshade 20 mm from the rear edge of the seat belt cover.

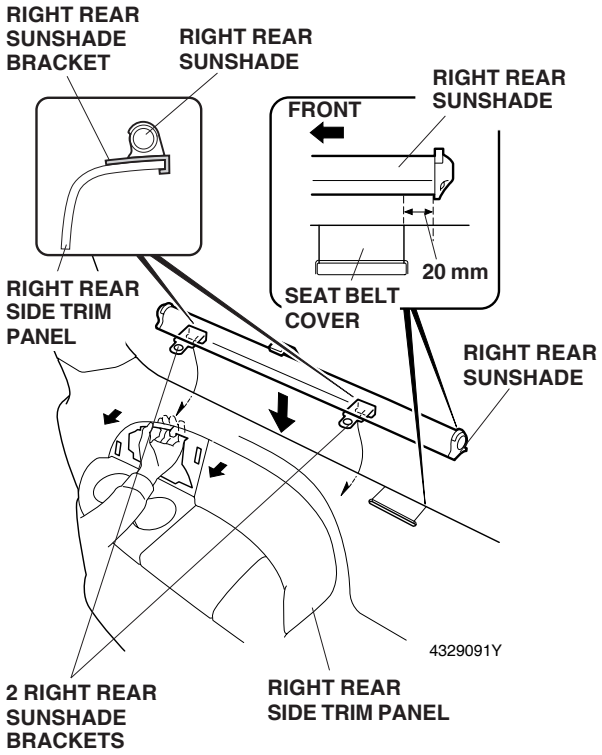

18. Using a felt-tip pen, mark the right rear side trim through the center of each bracket hole. Remove the rear sunshade.

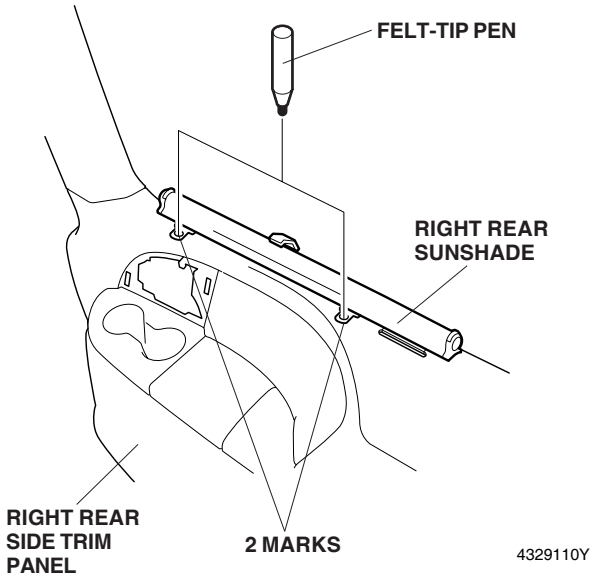

19. Center-punch the marks you made in the right rear side trim panel and drill each mark with a 7 mm drill bit:

- Using adhesive tape, wrap the end of the drill bit 5 mm from the tip.
- While wearing eye protection, drill a 7 mm hole through each center-punched mark.
- Remove any burrs from the drilled holes.

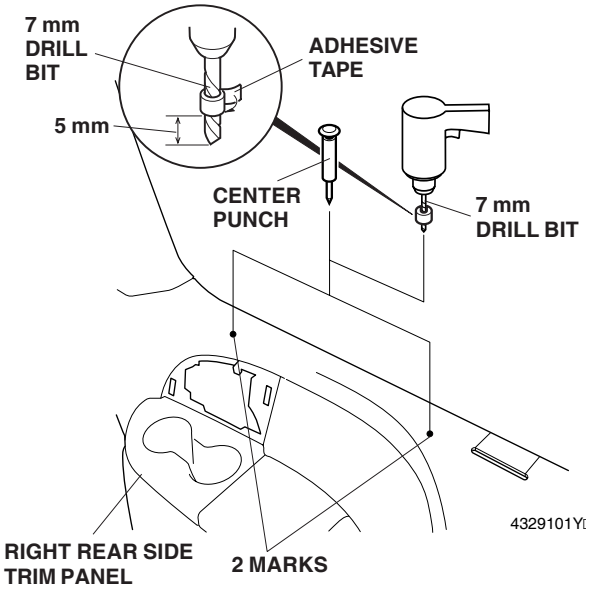

20. Reattach the rear sunshade on the side trim panel, and align the brackets over the drilled holes in the trim panel.

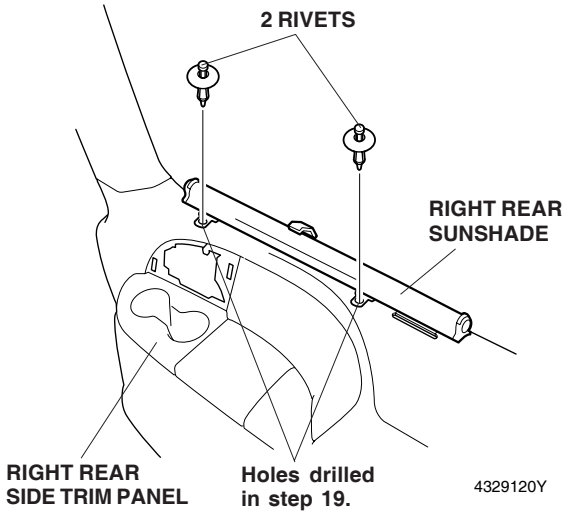

21. Secure the rear sunshade to the rear trim panel using two rivets from the kit, then reinstall the rear trim panel.

© 2007 American Honda Motor Co., Inc. - All Rights Reserved.

22. Insert a 6-inch scale against the top of the rear window between the glass and the headliner until the scale contacts the top of the glass. Measure 25 mm down from the top of the glass, and attach strips of masking tape to the window in the areas shown.

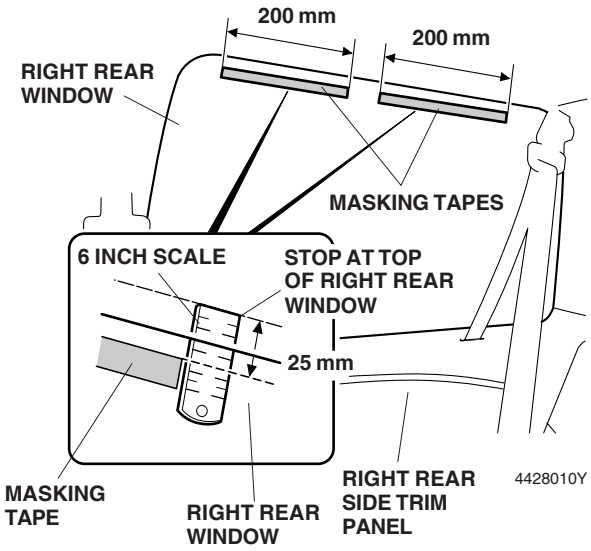

23. Pull up the rear sunshade until the cutouts in the sunshade reach the masking tape. Using a felt-tip pen, mark the top of the masking tape at each side of each cutout. Roll down the rear sunshade.

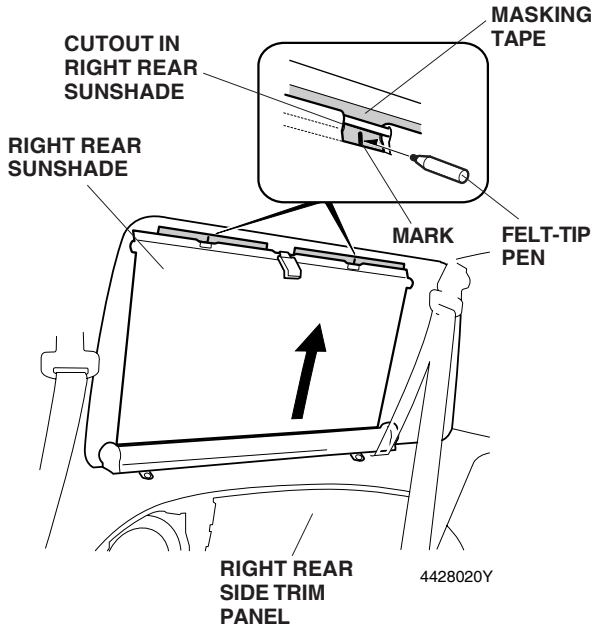

24. Using isopropyl alcohol on a shop towel, clean the right rear window above the marks you made on the masking tape.

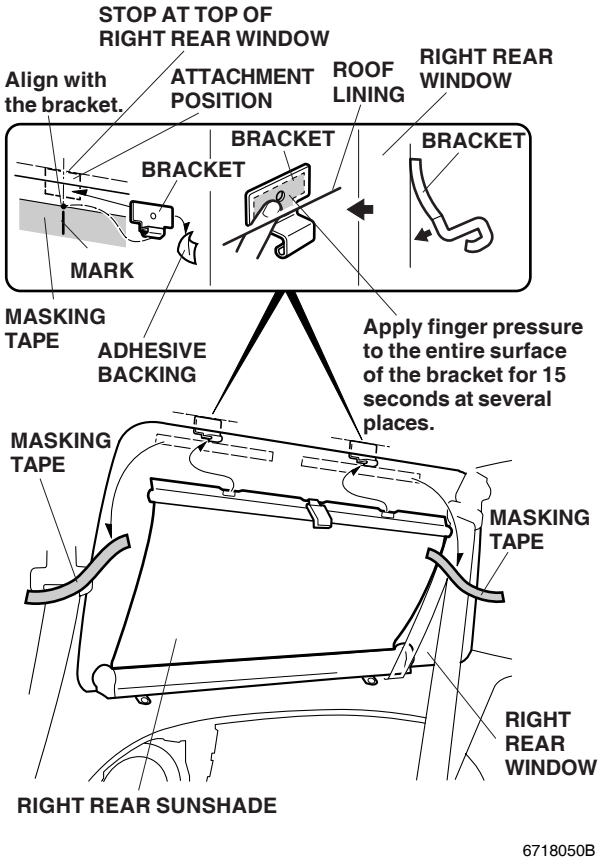

25. Remove the adhesive backing from one of the brackets and attach the bracket to the top of the right rear window between the marks on the masking tape.
    - Slightly turn up the roof lining.
    - Place the tape surface on the upper side of the bracket against the glass surface.
    - Apply force to the bracket so that it becomes curved, and gradually push it downward to attach it).
    - Remove the masking tape from the window.
    - Apply finger pressure to the bracket for 15 seconds to allow the tape to adhere to the glass. Install the other bracket the same way.

    NOTE: Be careful, as wrinkles will form when the roof lining is turned up.

© 2007 American Honda Motor Co., Inc. - All Rights Reserved.