www.collegehillshonda.com

HONDA

INSTALLATION INSTRUCTIONS	Accessory CARGO NET P/N 08L96-TK6-100	Application 2011 FIT	Publications No. All 45040 Issue Date NOV 2010

Put this information in the glove box with the vehicle owner's manual.

PARTS LIST

NOTE: On base model vehicles, cargo tie-down rings (sold separately) must be installed to use the cargo net.

Cargo net

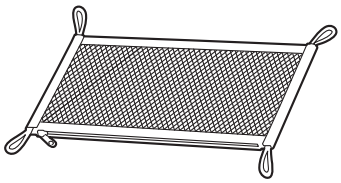

4 Hooks

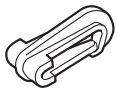

Illustration of the Cargo Net Installed on the Vehicle

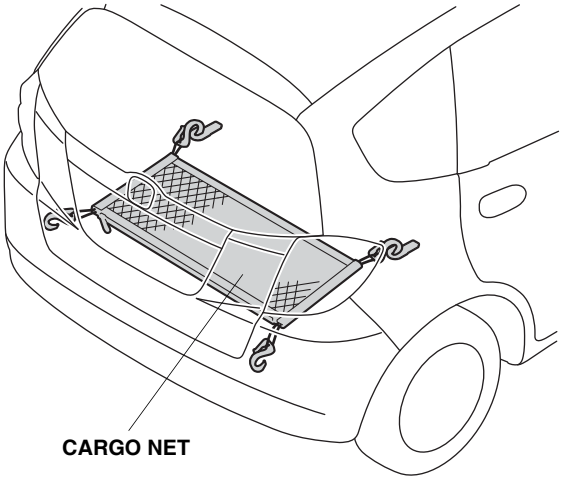

INSTALLATION

1. Install the four hooks to the cargo net.

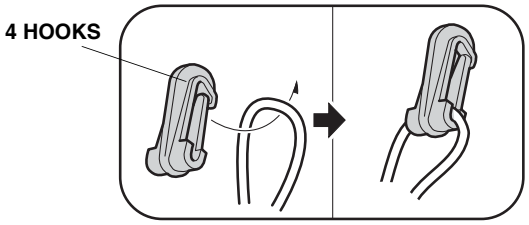

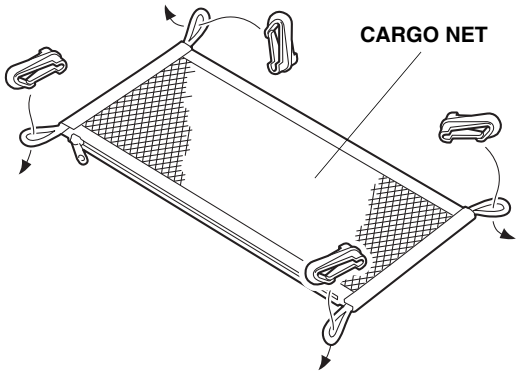

2. Position the cargo net with the zipper facing the rear of the vehicle. Attach the four cargo net hooks to the four tie-down rings.

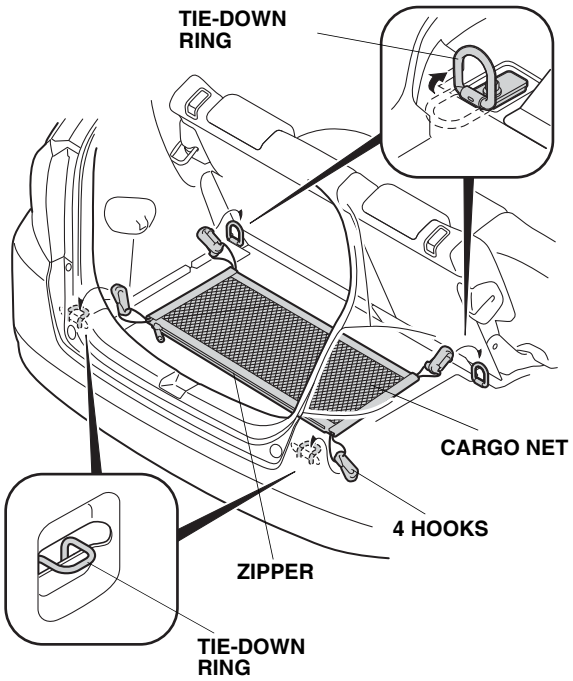

© 2010 American Honda Motor Co., Inc. – All Rights Reserved.