www.collegehillshonda.com

HONDA

INSTALLATION INSTRUCTIONS

Accessory	Application	Publications No.
TRUNK SPOILER	2014 CIVIC 4-DOOR	All 50699
		Issue Date NOV 2013

PARTS LIST

Trunk spoiler

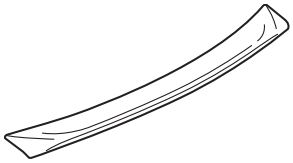

Left trunk spring (marked yellow)

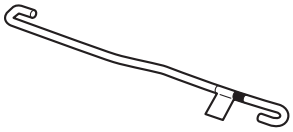

Template

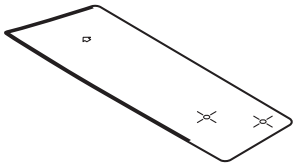

4 Clips

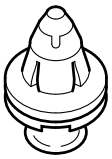

2 Alcohol swabs

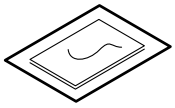

TOOLS AND SUPPLIES REQUIRED

Phillips screwdriver

Drill

Eye protection (face shield, safety goggles, etc.)

Center punch

File

Touch-up paint

Felt-tip pen

Tape

Masking tape

Heavy gloves

High-quality paste wax

Ruler

The following tools are available through the Honda Tool and Equipment Program. On the iN, click on: Service > Service Bay > Tool and Equipment Program, then enter the number under "Search". Or, call 888-424-6857.

- Trim Tool Set (T/N SOJATP2014)
- Rubber Roller (T/N MHLE54D)
- Trunk Spring Tool (T/N 07AAZ-S0KA100)
- Rotabroach Hole Cutting Kit (T/N BLR11201SO)

INSTALLATION

Customer Information: The information in this installation instruction is intended for use only by skilled technicians who have the proper tools, equipment, and training to correctly and safely add equipment to your vehicle. These procedures should not be attempted by "do-it-yourselfers."

NOTE:

- Be careful not to damage the paint finish.
- This trunk spoiler kit should be installed only if the ambient air temperature is 15°C (60°F) or above.
- Clean and wax the areas to be covered with a high-quality paste wax.
- To allow the adhesive to cure, do not wash the vehicle for 24 hours. Please advise the customer.

© 2013 American Honda Motor Co., Inc. – All Rights Reserved.

www.collegehillshonda.com

1. Open the trunk lid. If equipped, remove the trunk lid trim panel (11 clips).

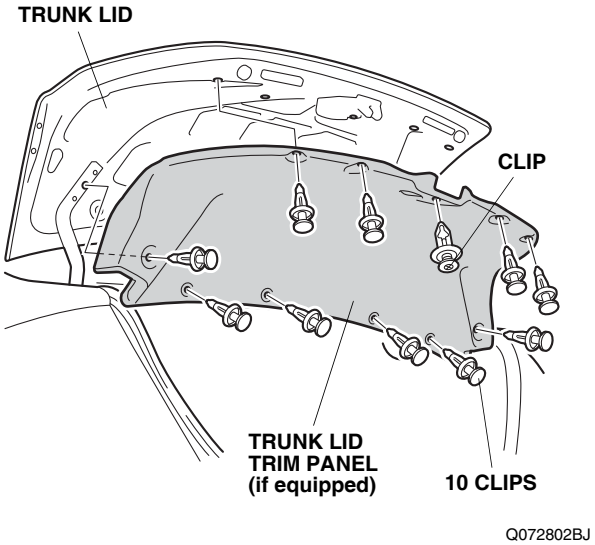

Installing the Trunk Spoiler

2. Close the trunk lid. To prevent the metal shavings from falling onto the trunk floor, attach strips of tape to the trunk lid as shown.

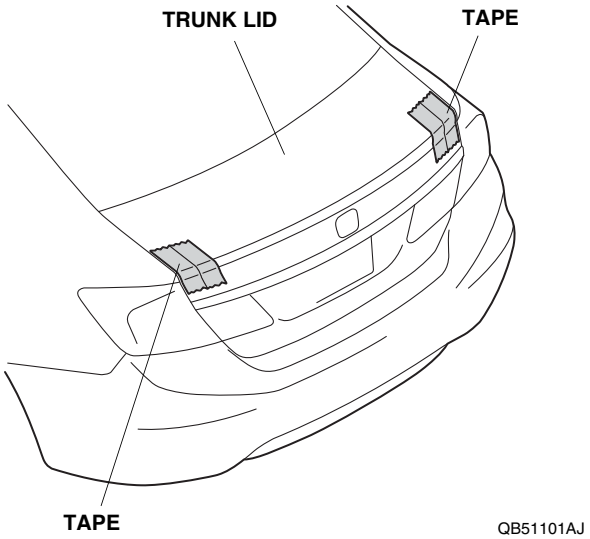

3. Place the template on the left side of the trunk lid, and align the template with the edge of the trunk lid as shown. Tape the template to the trunk lid with strips of masking tape.

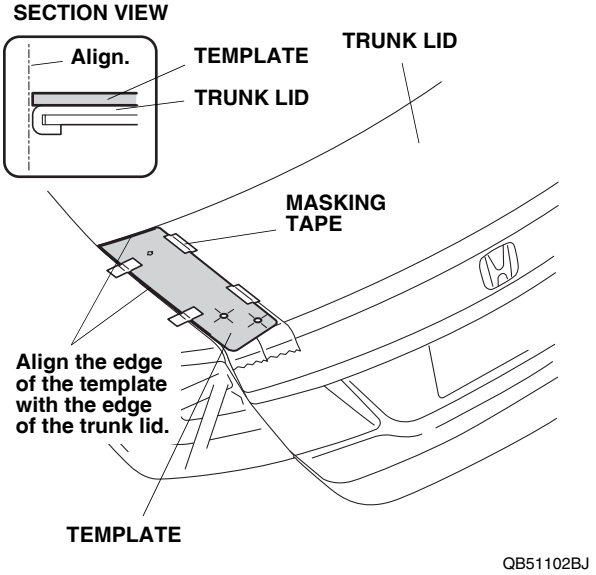

4. Using a felt-tip pen, mark the trunk lid through the template at the two locations shown on the template.

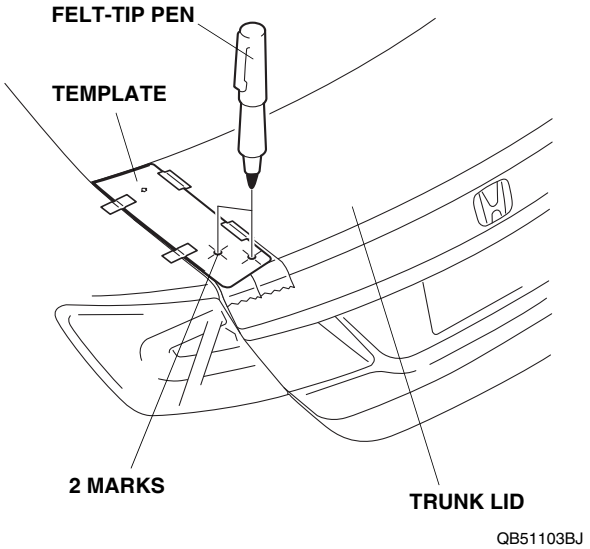

5. Remove the template.
6. Turn the template over, and repeat steps 3 through 5 on the right side of the trunk lid.

© 2013 American Honda Motor Co., Inc. – All Rights Reserved.

www.collegehillshonda.com

7. Center-punch the four marks you made on the trunk lid. If using an automatic center punch, set it to the minimum setting.

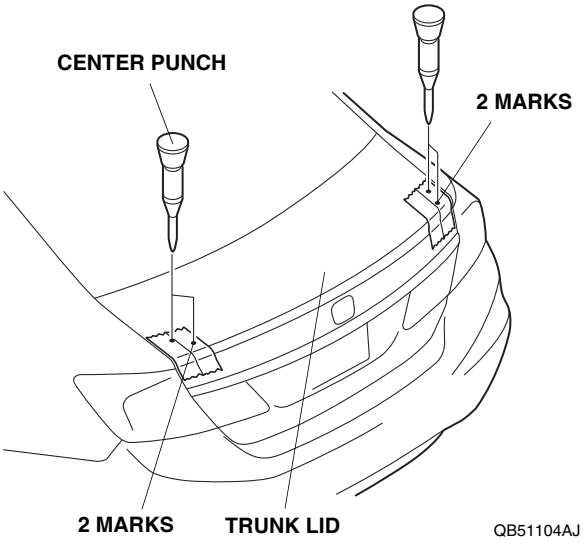

8. While wearing eye protection, drill four 8.5 mm holes at the center-punched marks with an 8.5 mm hole cutter. Drill perpendicular to the trunk lid.

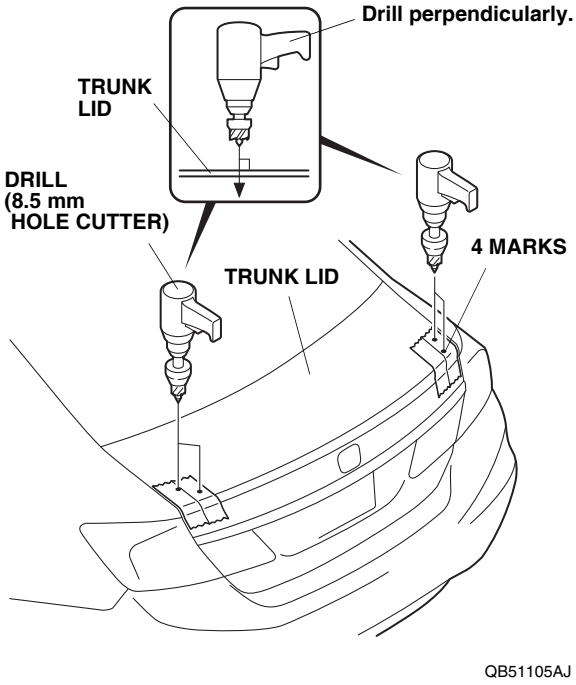

9. Remove the tape installed in step 2. Remove all burrs and metal shavings with a file, and apply touch-up paint to the edges of the holes.

10. Using two alcohol swabs, thoroughly clean the trunk lid where the trunk spoiler will attach.

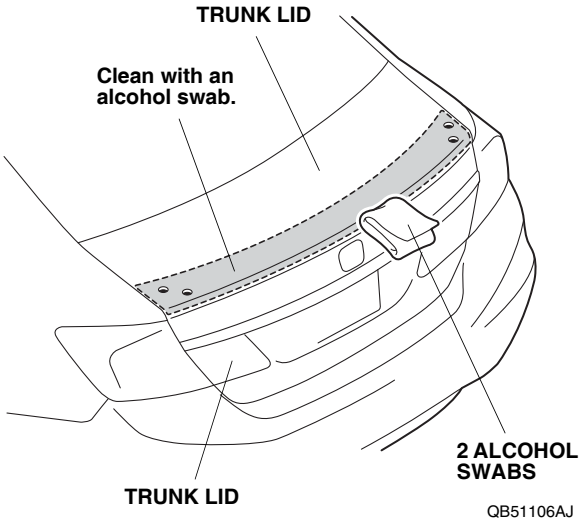

11. Get the trunk spoiler and the four clips. Install the four clips to the trunk spoiler.

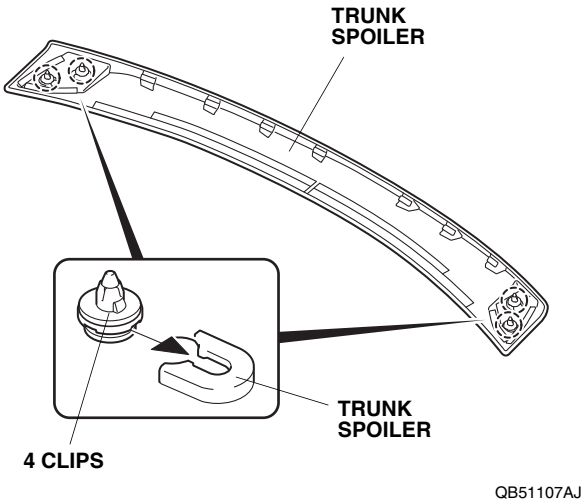

© 2013 American Honda Motor Co., Inc. – All Rights Reserved.

www.collegehillshonda.com

12. Peel back the tab tape from each adhesive strip, and tape the ends to the front surface of the trunk spoiler.

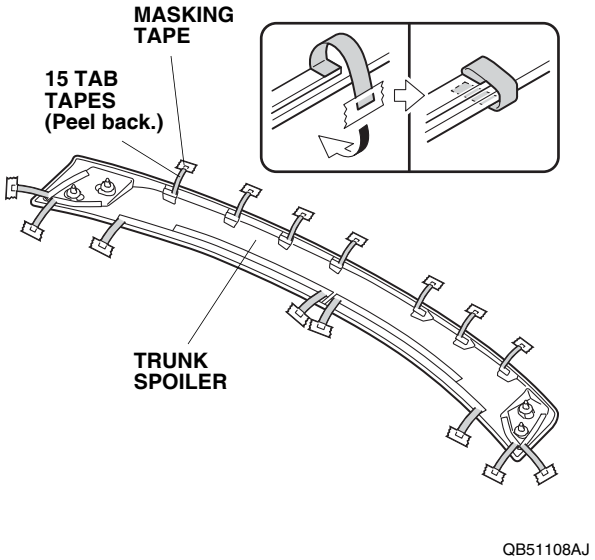

13. Align four clips in the spoiler with the holes in the trunk lid, and install the spoiler. Apply pressure to the trunk spoiler over each clip until you hear a click. Do not apply excessive pressure.

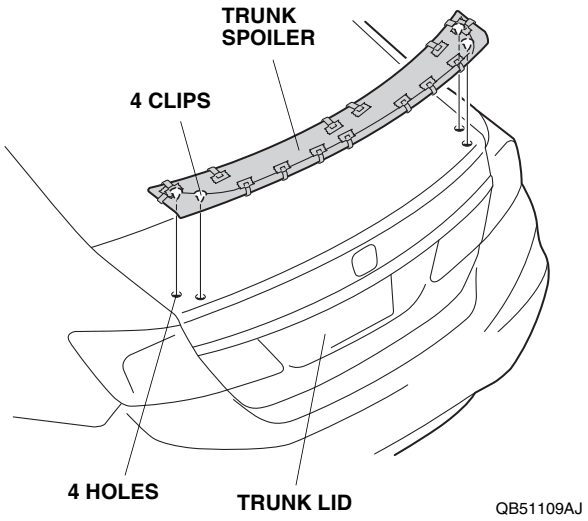

14. Visually check that the clearance between the trunk spoiler and the trunk lid is the same on both sides. If necessary, adjust the position of the trunk spoiler until there is equal spacing on each side.

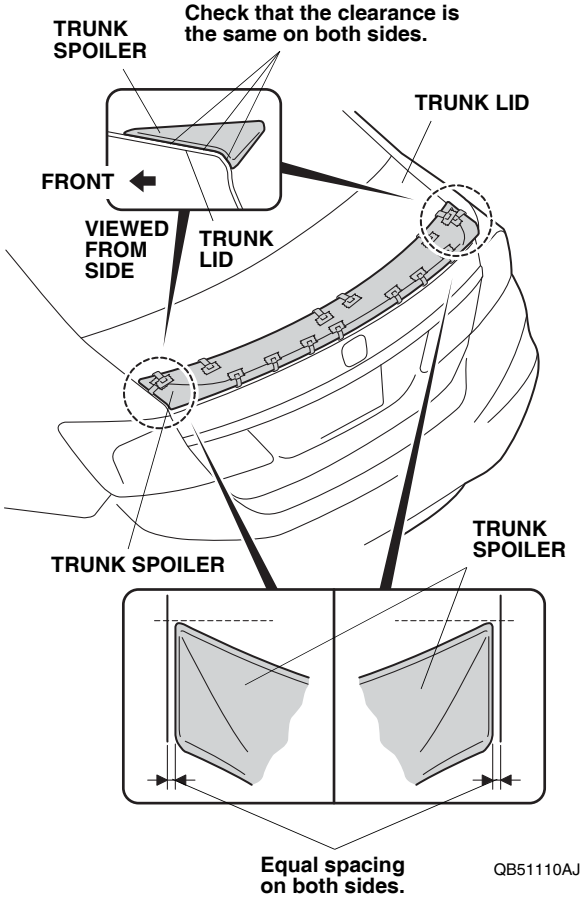

© 2013 American Honda Motor Co., Inc. – All Rights Reserved.

www.collegehillshonda.com

15. While applying light pressure against the trunk spoiler, carefully remove the bottom adhesive backings shown.

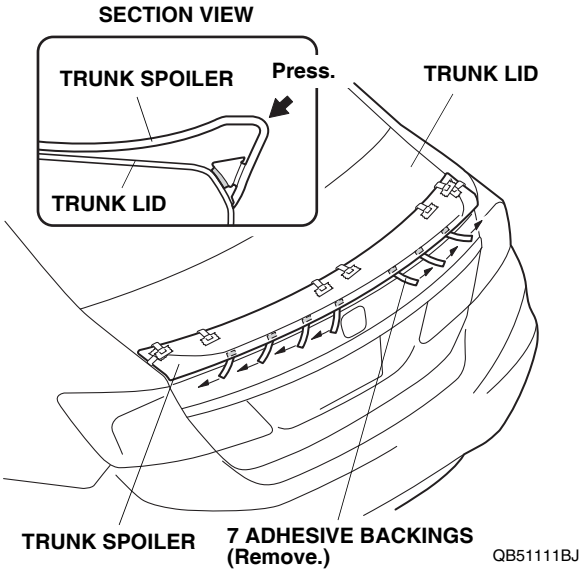

16. Using your hand, firmly press the rear portion of the trunk spoiler against the trunk lid.

17. While applying light pressure against the trunk spoiler, carefully remove the two top center adhesive backings shown.

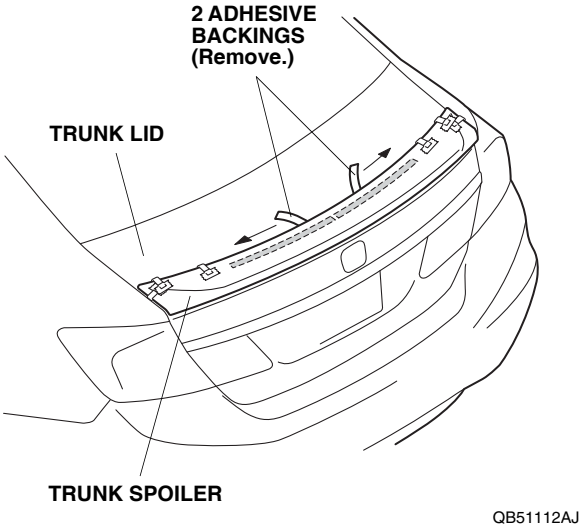

18. Using your hand, firmly press the top center portion of the trunk spoiler against the trunk lid.

19. While applying light pressure against the trunk spoiler, carefully remove the next two inboard adhesive backings shown.

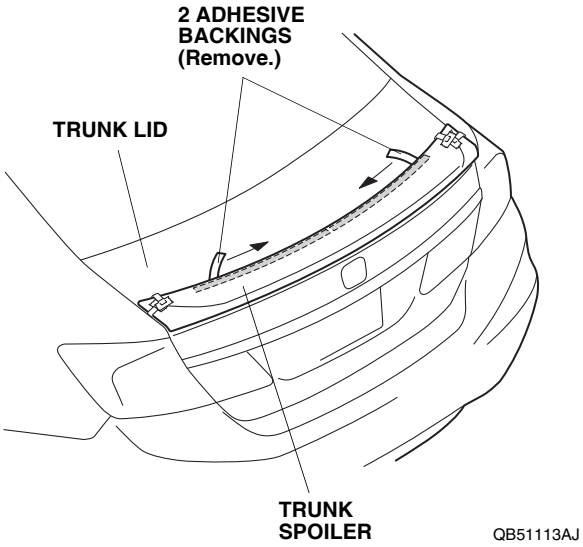

20. Using your hand, firmly press this portion of the trunk spoiler against the trunk lid.

21. While applying light pressure against the trunk spoiler, carefully remove the two outboard adhesive backings shown.

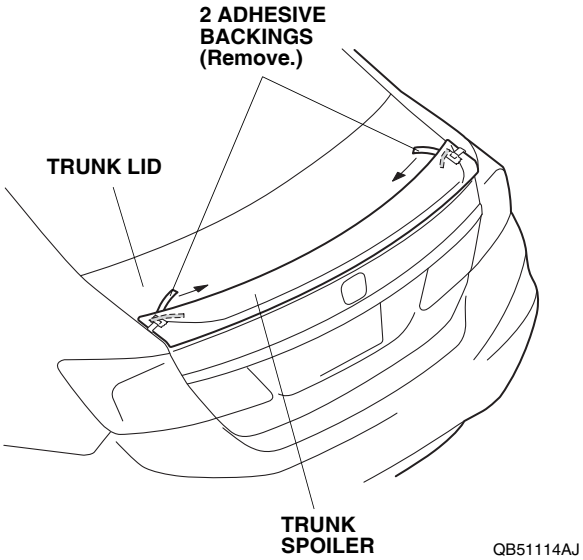

22. Using your hand, firmly press this portion of the trunk spoiler against the trunk lid.

© 2013 American Honda Motor Co., Inc. – All Rights Reserved.

www.collegehillshonda.com

23. While applying light pressure against the trunk spoiler, carefully remove the two remaining adhesive backings shown.

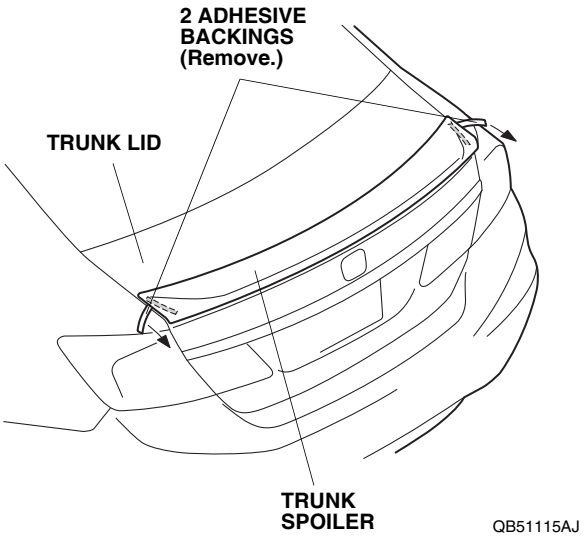

24. Using your hand, firmly press the edge of the trunk spoiler against the trunk lid.

25. Using a rubber roller, apply firm pressure while rolling to set the adhesive especially at the ends.

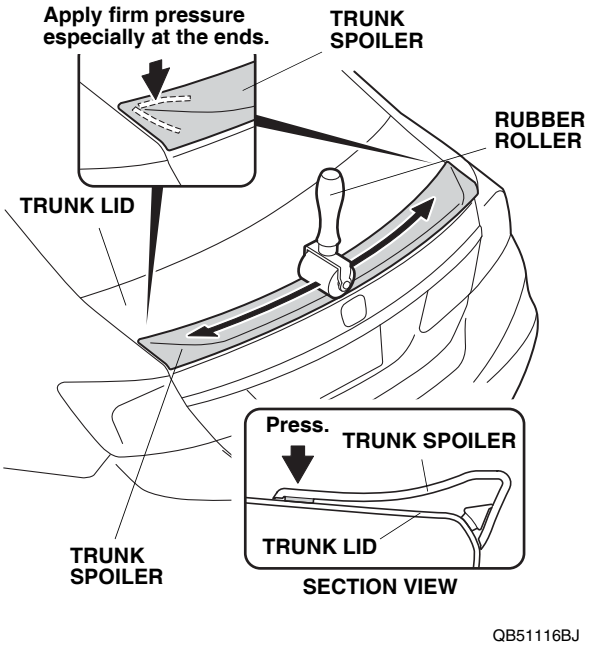

Installing the Trunk Springs

26. Open the trunk lid. Push the tabs, and pull down the left and right seat-back release levers to release the hooks. Move the left and right seat-back release levers out of your way.

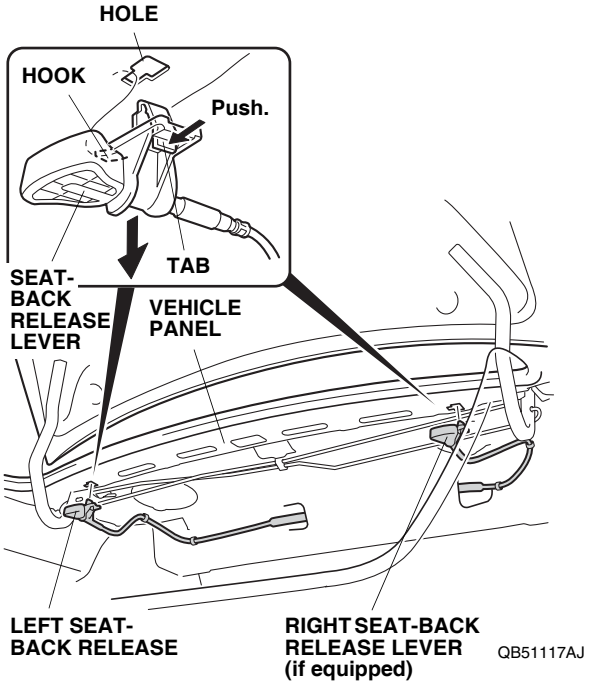

27. Remove the center clip from the left and right trunk springs.

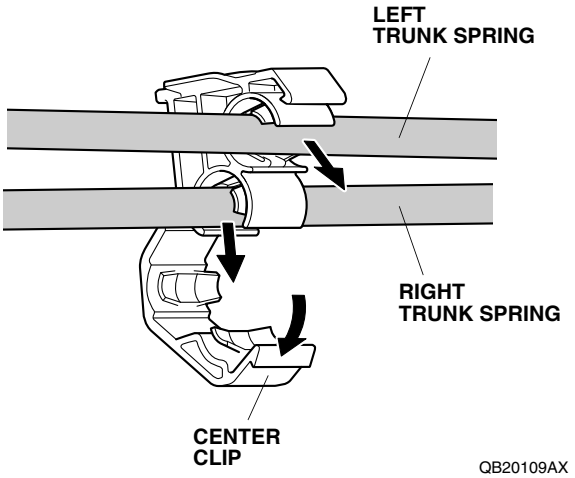

© 2013 American Honda Motor Co., Inc. – All Rights Reserved.

www.collegehillshonda.com

28. Put on heavy gloves to protect your hands. With an assistant holding the trunk lid open, remove both trunk springs with the trunk spring tool. Pull the trunk spring tool slowly and carefully toward you. First remove the right trunk spring, then remove the left trunk spring.

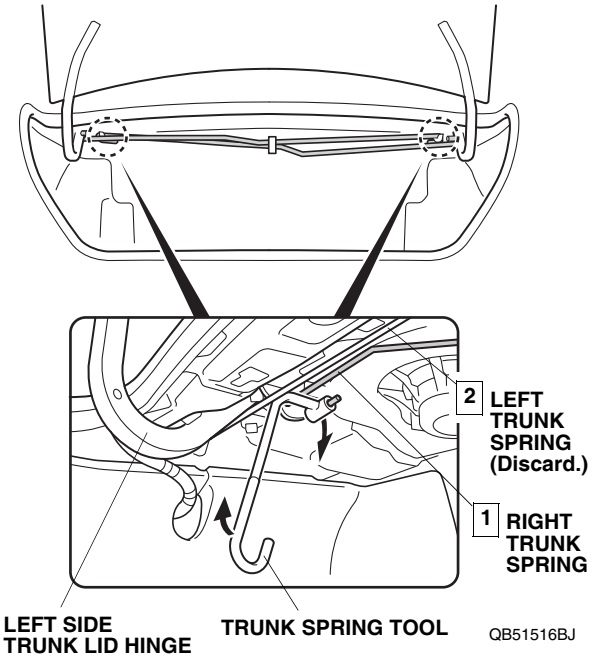

29. Install the right trunk spring and new left trunk spring in the reverse order of removal:
    - Install the yellow marked trunk spring in the slot in the left side (driver's side) trunk lid hinge and to the right (passenger's side) hinge bracket; install the trunk spring (reused) in the slot in the right side (passenger's side) trunk lid hinge and to the left (driver's side) hinge bracket.
    - Rotate the trunk spring tool as you pull it towards you.
    - Set the trunk spring in the first notch (original position) of the hinge bracket.

NOTICE: Be careful when installing the trunk springs as it could repel with strong force and cause injury.

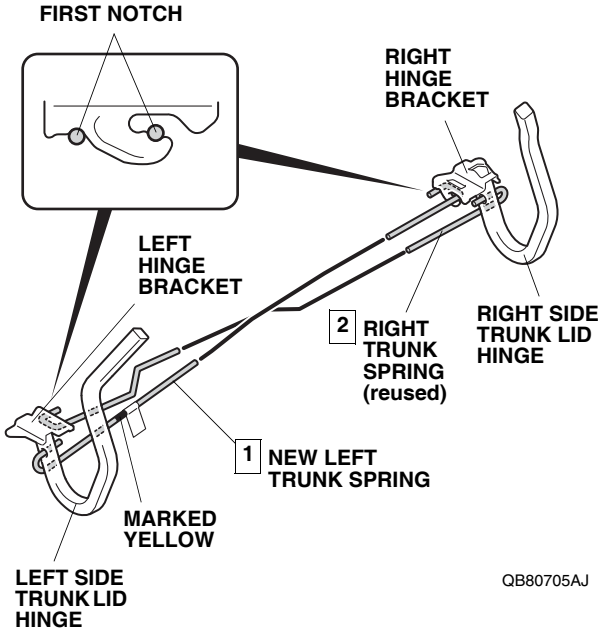

© 2013 American Honda Motor Co., Inc. – All Rights Reserved.

www.collegehillshonda.com

30. Reinstall the center clip to the trunk springs.

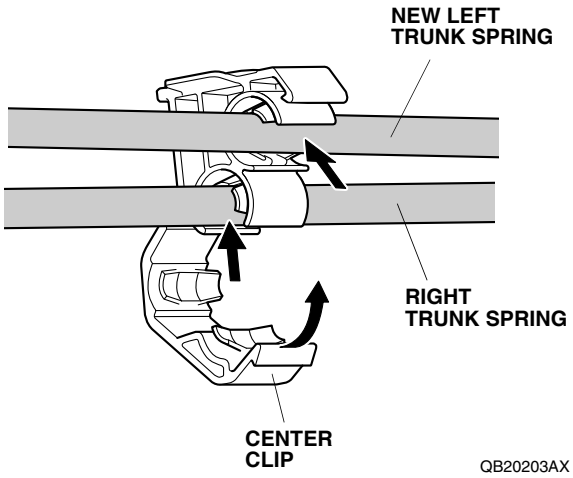

31. Reinstall all removed parts.

© 2013 American Honda Motor Co., Inc. – All Rights Reserved.